FREE INSIDE! 2/6 BLUEPRINT OF £20 TV SET

PRACTICAL TELEVISION

AND TELEVISION TIMES

1/-

EDITOR
F. J. CAMM

A NEWNES PUBLICATION

Vol. 2 No. 22 MARCH 1952

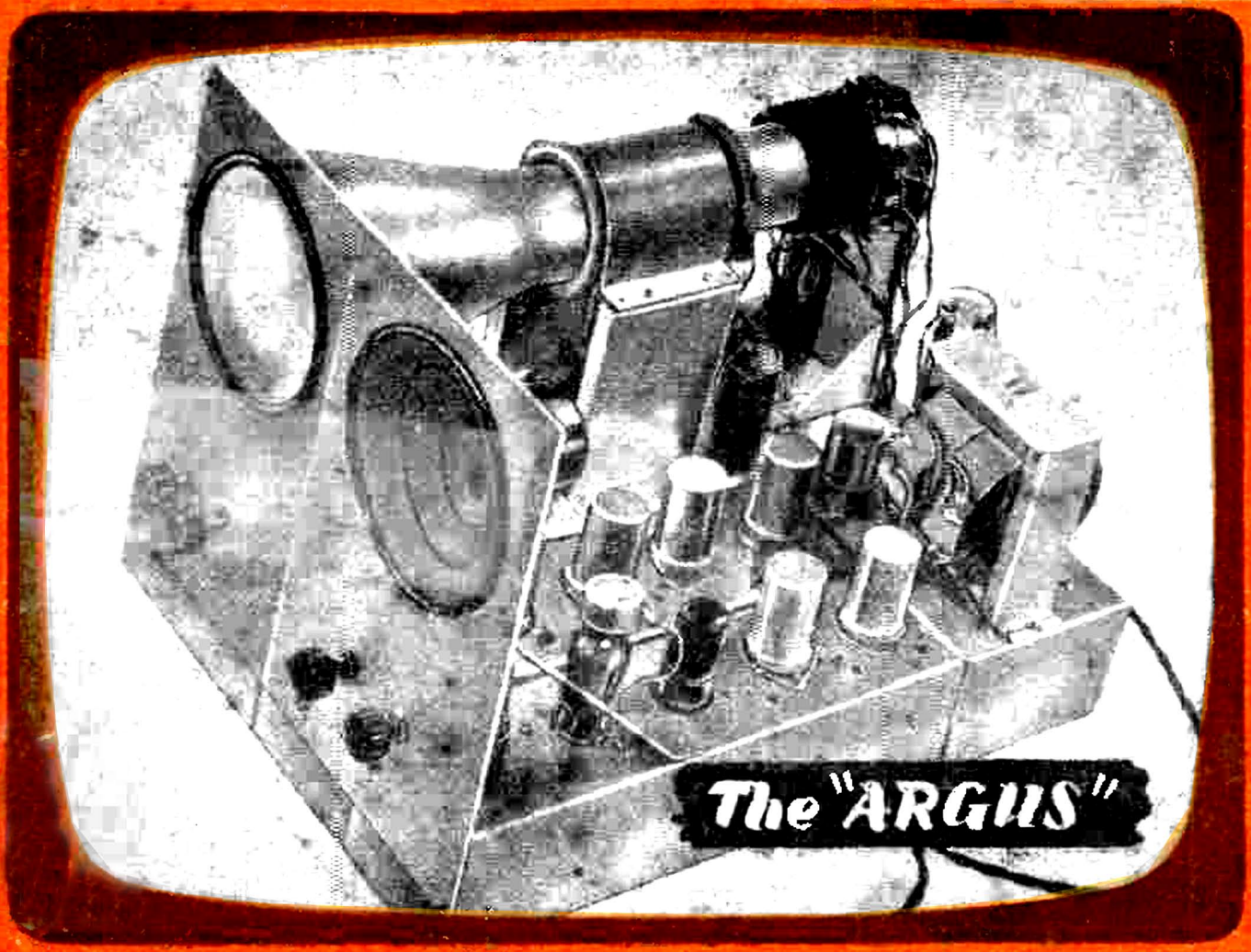

FEATURED IN THIS ISSUE

The "ARGUS"

BUILDING OUR *Free Blueprint* TELEVISION RECEIVER

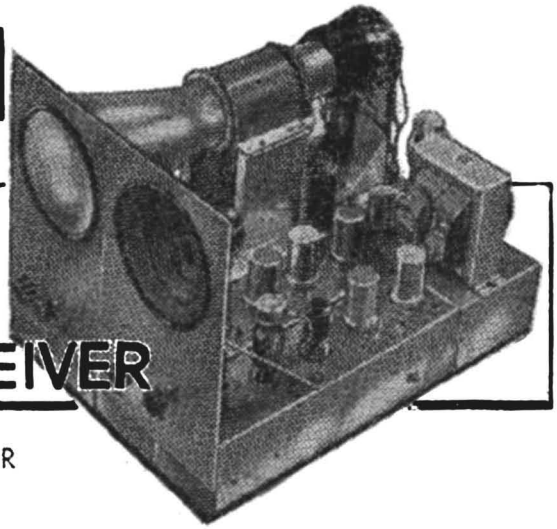

A 21-VALVE 6IN. C.R. TUBE UNIT-BUILT TELEVISOR FOR THE AMATEUR

ALTHOUGH this televisor costs less than £20, it does not involve the conversion of ex-Government units, but has been designed for construction by the novice. The circuits have been kept straightforward and devoid of "frills," though nothing has been sacrificed which would assist in its efficient and stable operation.

The cathode-ray tube used is a VCR97. This 6in. tube was chosen as it is readily available at a low cost, and is capable of providing pictures of very good quality. The trace is green, but one soon becomes accustomed to the colour, and it is very restful to the eyes.

The chassis is divided into five separate units, which makes for ease of construction; the units are: vision receiver; sound receiver; time base; E.H.T. supply and C.R.T. network; and power unit. Each unit is complete on its own chassis, and when finished all units are bolted together to form the complete televisor.

Aluminium sheet is used for chassis construction; this material is readily obtainable and is easy to work. Details of the construction of each chassis will be given later.

By using separate units the work can proceed in planned stages, each stage being complete in itself. It is not strictly necessary to construct the units in any particular order, but the newcomer is recommended to follow the method given.

The overall dimensions of the chassis are 13in. wide by 18in. long by 3in. deep.

Although no ex-Government parts were used in the original, ex-Government components and valves can be employed provided they are in good order. Particular care should be taken to check any condensers obtained from this type of equipment.

The Vision Receiver

The circuit of the vision receiver is shown in Fig. 1. It has four R.F. stages, which feed into the EA50 diode detector. The rectified output is fed into the video valve V6.

The coil data is given in Fig. 5 and all the coil formers are ⅜in. diameter with the exception of the rejector coils, which are wound on ¼in. formers; spacing between turns should be approx. 2 mm. Tuned-anode circuits are used. The sound receiver feed is taken from a coupling coil wound on L2.

The contrast (gain) control is obtained from VR1, and R4, which is not by-passed by a condenser, and

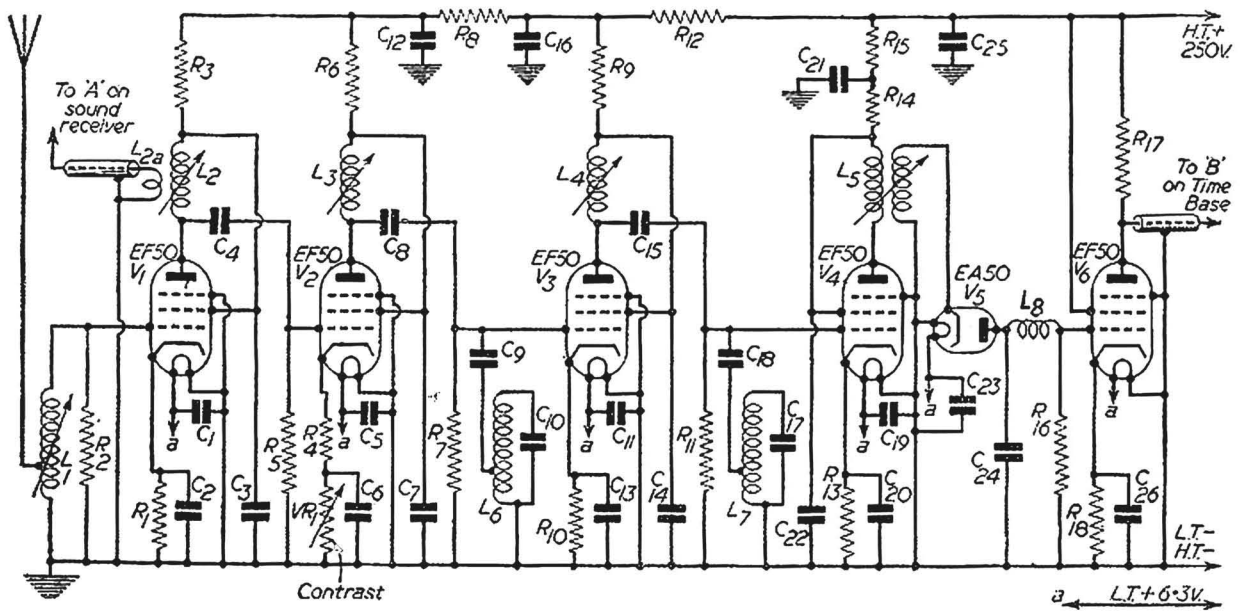

Fig. 1.—Circuit of the vision unit.

provides a small degree of negative feed-back, which helps to counteract the de-tuning effect of VR1.

The rejector coils should be wound with 22 S.W.G. wire, and spacing should be approximately 1 mm. between turns.

The earth wiring is completed in bare wire, but the other wiring should be covered with insulated sleeving. All wiring should be kept as short as possible, the ends of the wires should be wrapped round the tags, and make good electrical contact *before the solder is applied.*

It is a good idea to tick off each wire on the diagram as it is connected, and each wire should be soldered as it is terminated.

Building the Vision Receiver

When the chassis have been made up and the holes drilled, the valveholders should be fitted in position and the filaments wired, including the diode detector V5. The earthed side of the filaments is connected by running one end of the wire under the bolt which holds the valveholder to the chassis.

Commence the work by winding L1 (Fig. 1). The tap is made by twisting a small loop in the wire no more than ¼in. long and applying solder. The earthy end of the wire is wound round the bolt, which fastens the coil former to the chassis. The top end of the coil goes to grid of V1. Spacing between the turns should be approximately 2 mm.

The tap is left unconnected at this stage, but R2 should be wired in across the coil. R1 and C2 can be connected now and the remaining earthed pins of the valve wired as shown in the diagram. The first screen can be erected and work can proceed on the second half of V1 and the first half of V2.

L2 coil is bolted in position and the secondary is wound with bare wire (22 S.W.G.) by connecting one end of the wire to the anode of V1, winding it round the coil for the appropriate number of turns and taking the other end to G2. The primary is now wound on top of the secondary, using insulated wire; the bottom end is connected to one of the bolts holding the coil former and the other end is left free at this stage. Fig. 5 shows the method of winding the coil.

The remainder of the components are wired in. One end of R4 is connected to the cathode of V2, the other end being left free at this stage. When the wiring is completed the second screen should be erected and work commenced on the second half of V2 and the first half of V3.

L3 should now be fitted and should be wound in a similar manner to L2 except that this time there is no coupling coil.

L6 is now wound and fitted in position, the bottom end of the coil being earthed under one of the coil former retaining bolts. A tap is made for connection to C9 in a similar manner to the tap on L1, it being made at the

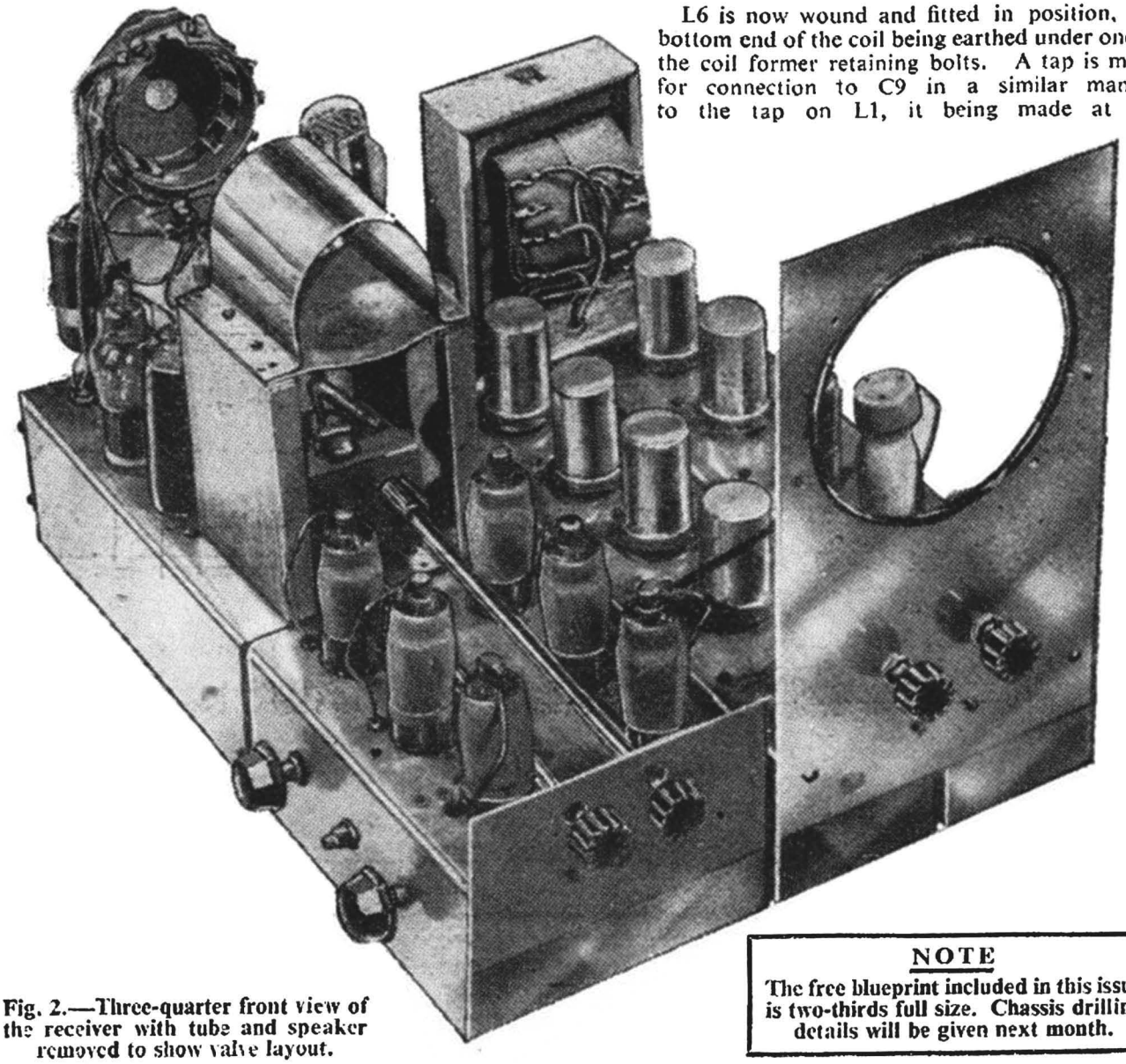

Fig. 2.—Three-quarter front view of the receiver with tube and speaker removed to show valve layout.

NOTE

The free blueprint included in this issue is two-thirds full size. Chassis drilling details will be given next month.

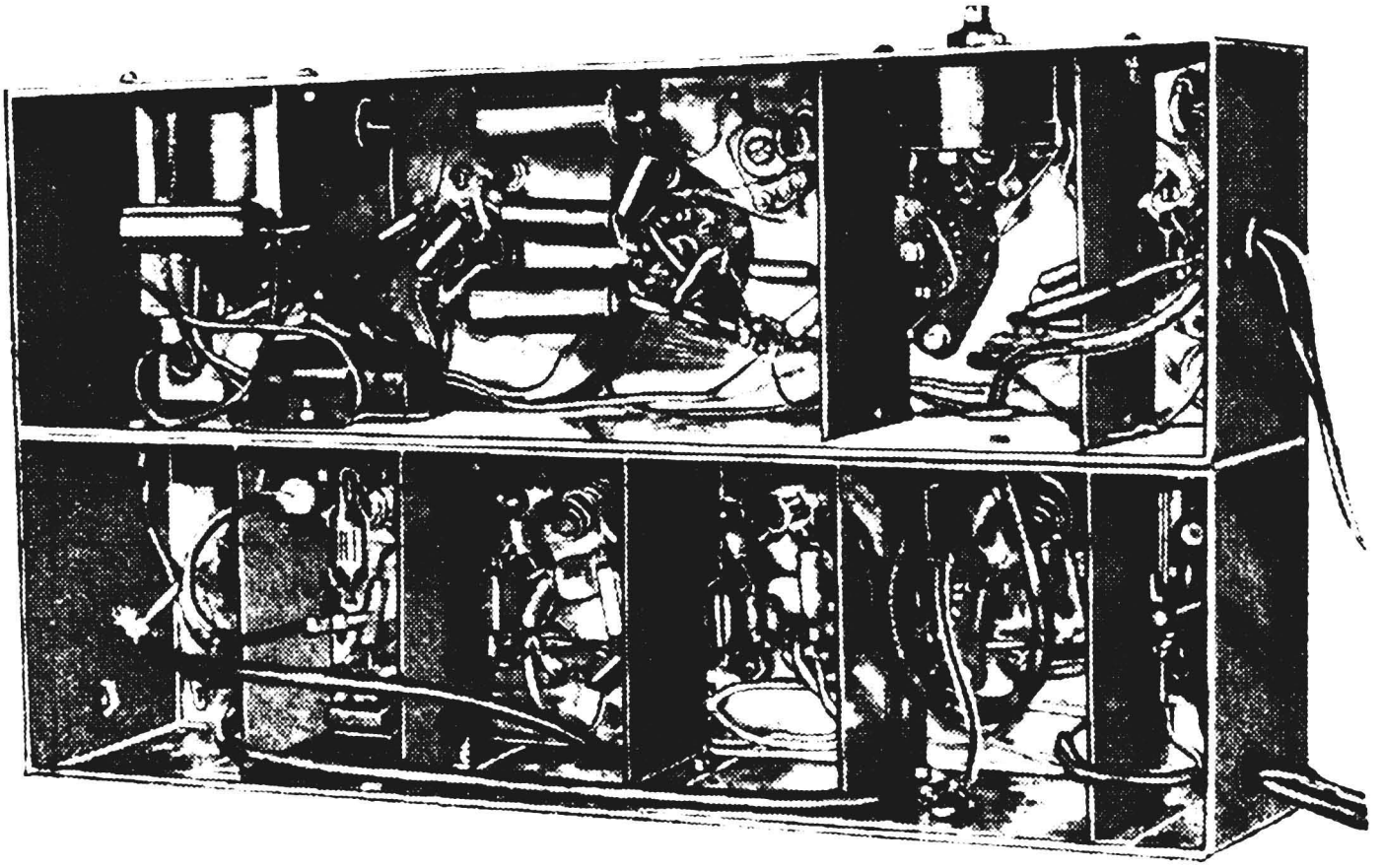

Fig. 3.—Under-chassis view of vision and sound chassis, bolted together.

earthy end of the coil. C10 and C9 can now be wired in. In addition to the capacitative coupling provided by C9 there will be a certain amount of inductive coupling directly between the two coils.

The remainder of the components can be connected and the screen erected. The next stage is dealt with in a similar manner.

L5 has two coils. The primary (anode) coil is wound first and the secondary is wound above it. The two coils are separated by approximately 2 mm., and the first turn of the secondary is covered with insulated sleeving to prevent contact between the two coils. Fig. 5 shows winding details.

Wiring should proceed and L8 can then be wound. This coil is wound with 34 S.W.G. enamelled silk and cotton-covered wire on a former comprising a 1 megohm 1 watt resistor. The method of winding this coil is shown in Fig. 5.

The wiring of V6 is then completed. The value of the condenser in the cathode circuit of V6 depends upon the amount of gain versus quality required from the valve. For maximum quality the value should be low. The gain can be increased by increasing this to 0.01 μF or even 0.1 μF. In very weak signal areas, where maximum gain is required, it can be increased to 25 μF, but in this case C25 should be increased to 8 μF. This latter condenser should be connected across C25 and be in addition to it.

The coaxial cable link to the time base can be connected as shown in the blueprint and the coaxial cable links from L1 and from L2 can be wired. A piece of flex is taken from the L.T. common and from the H.T. common as shown in the diagram.

Finally check all the wiring thoroughly.

The Sound Receiver

The circuit is shown in Fig. 4. It comprises 2 R.F. stages which are transformer coupled, followed by the Osram D63 (or 6H6) detector and interference limiter; this feeds into a high-slope pentode (EF39), the output of which is fed to the 6V6 power output tetrode. A sensitivity control VR2 is provided to pre-set the gain in areas of high signal strength. Once it has been set there should be no need for readjustment. R21 in the cathode circuit of V8 is not by-passed by a condenser. This helps to overcome the detuning effect of VR2.

C39 is for tone correction. It is useful in weak signal areas and its value can be increased (if desired) to 0.01 μF to reduce the mush. Where adequate signal strength is available it can be omitted.

V10 has a top cap grid connection and the feed to this point should be made in screened wire, a screened cap being provided.

The tuning coils are tuned by the 0-30 pF postage stamp type trimmers. The use of these trimmers allows the sound signal to be located quickly, the final tuning being completed by the iron cores of the coils.

Input to the receiver is taken from the anode coil of the first vision receiver R.F. valve V1. The actual connection (made in coaxial cable) should be left as the last job.

The use of H.F. transformers allows maximum voltage to be applied to the anodes of the R.F. valves, the decoupling resistor being common to anodes and screens and thus effecting a saving in components and complication in the wiring.

The number of turns for the coils is given on the blueprint. The wire used is 22 S.W.G., but the primaries are insulated with sleeving. If plastic sleeving is used, care

LIST OF COMPONENTS AND PRICES

VISION RECEIVER

Condensers

C1—500 pF.	C10—10 pF.	C19—500 pF.
C2—500 pF.	C11—500 pF.	C20—500 pF.
C3—500 pF.	C12—500 pF.	C21—500 pF.
C4—100 pF.	C13—500 pF.	C22—500 pF.
C5—500 pF.	C14—500 pF.	C23—500 pF.
C6—500 pF.	C15—100 pF.	C24—15 pF.
C7—500 pF.	C16—500 pF.	C25—500 pF.
C8—100 pF.	C17—10 pF.	C26—500 pF.
C9—5 pF.	C18—5 pF.	

Resistors

R1—220 Ω.	R7—5.6 KΩ	R13—220 Ω
R2—4.7 KΩ	R8—3.3 KΩ	R14—4.7 KΩ
R3—4.7 KΩ	R9—4.7 KΩ	R15—1 KΩ
R4—33 Ω	R10—220 Ω.	R16—2.7 KΩ
R5—5.6 KΩ	R11—5.6 KΩ	R17—5 KΩ
R6—4.7 KΩ	R12—1 KΩ	R18—60 Ω

All resistors ½ watt. Control—VR1 2.5 KΩ carbon.

Valves

V1—EF50.	V3—EF50.	V5—EA50
V2—EF50.	V4—EF50	V6—EF50

Costs :—

Valves	£1 12 6
Condensers	13 0
Resistors	6 0
Sundries	13 0
TOTAL	£3 4 6

SOUND RECEIVER

Condensers

C27—500 pF.	C32—.01 μF.	C36—.5 μF.
C28—500 pF.	C33—.001 μF.	C37—.05 μF.
C29—500 pF.	C34—25 μF.	C38—50 μF.
C30—500 pF.	C35—.5 μF.	C39—.001 μF.
C31—35 pF.		

Resistors

R19—220 Ω	R24—4.7 KΩ	R29—750 KΩ
R20—4.7 KΩ	R25—2.2 MΩ	R30—50 KΩ
R21—33 Ω	R26—470 Ω	R31—500 Ω
R22—4.7 KΩ	R27—20 KΩ	R32—500 Ω
R23—2.2 MΩ	R28—250 KΩ	

(R31 and R32 1 watt ; the remainder ½ watt.)

Controls—VR2=2.5 KΩ carbon. VR3=500 KΩ carbon.

Valves

V7—EF50.	V9—EB34.	V10—EF39.
V8—EF50		V11—6V6.

Costs :—

Valves	£1 7 0
Condensers	6 0
Resistors	4 9
Potentiometers	3 0
L.S. and transformer	1 0 0
Sundries	10 6
TOTAL	£3 11 3

TIME BASES

Condensers

C40—.01 μF.	C47—.1 μF.	C54—.1 μF.
C41—.1 μF.	C48—.1 μF.	C55—.1 μF.
C42—.1 μF.	C49—.001 μF.	C56—100 pF.
C43—.5 μF.	C50—.001 μF.	C57—100 pF.
C44—.05 μF.	C51—.1 μF.	C58—0-30 pF.
C45—.1 μF.	C52—50 pF.	C59—.005 μF.
C46—8 μF.	C53—50 pF.	C60—.01 μF.

All 450 v. working.

Resistors

R33—1 MΩ	†R42—120 KΩ	R50—47 KΩ
R34—3 KΩ	*R43—56 KΩ	R51—10 KΩ
*R35—10 KΩ	R44—47 KΩ	*R52—56 KΩ
R36—1 MΩ	R45—4.7 KΩ	*R53—120 KΩ
*R37—100 KΩ	R46—2 MΩ	*R54—120 KΩ
R38—10 KΩ	†R47—120 KΩ	R55—2.2 MΩ
*R39—50 KΩ	*R48—56 KΩ	*R56—56 KΩ
R40—10 KΩ	R49—2.2 MΩ	R74—33 KΩ
R41—1 MΩ		

* = 1 watt. † = 2 watt. Rest = ½ watt.

Valves

V12—EA50.	V15—SP61.	V17—SP61.
V13—SP61.	V16—SP61.	V18—SP61.
V14—SP61.		

Potentiometers

VR4—2 MΩ carbon.	VR6—25 KΩ 2 watt. wirewound.
VR5—2 MΩ carbon.	

Costs :—

Valves	£1 4 0
Condensers	8 0
Resistors	8 0
Sundries	14 0
TOTAL	£2 14 0

C.R.T. NETWORK AND E.H.T. SUPPLY

Condensers

C61—0.03 μF 2.5 Kv.	C63—0.1 μF 2.5 Kv.
C62—0.1 μF 2.5 Kv.	C64—0.1 μF 450 v.

Resistors

R57—2.2 MΩ	R62—100 KΩ	*R67—180 KΩ
R58—2.2 MΩ	†R63—100 KΩ	*R68—500 KΩ
R59—2.2 MΩ	R64—1 MΩ	*R69—500 KΩ
R60—2.2 MΩ	R65—2.2 MΩ	*R70—500 KΩ
R61—100 KΩ	*R66—500 KΩ	*R71—500 KΩ

*=1 watt. †=2 watt. Rest=½ watt.

Valves

V19—EA50.	V20—2X2.

Controls

VR7—100 KΩ carbon.	VR9—100 KΩ carbon.
VR8—100 KΩ carbon.	VR10—500 KΩ carbon.

Costs :—

E.H.T. transformer	£2 0 0
C.R. Tube	1 15 0
Valves	8 6
Condensers	5 3
Resistors	7 6
Potentiometers	6 0
Sundries	7 0
TOTAL	£5 9 3

POWER PACK

Costs :—

Mains Transformer 425-0-425 200 mA., 6.3 v. 4 A., 6.3 v. 4A., 5 v. 3 A. ..	£2 11 0
V21 5U4G	9 0
Choke 3H 250 mA.	6 0
C65 and C66 16+16 450 v. .. .. / C67 and C68 8+8 450 v.	7 6
Resistors R72 2.5 KΩ 10 W., R73 2.5 KΩ 15 W.	4 0
TOTAL	£3 7 6

Vision Receiver..	£3 4 6
Sound Receiver..	3 11 3
Time Base	2 14 0
C.R.T. Network	5 9 3
Power supply	3 7 6
Hardware, etc.	18 0
Grand Total	£19 5 0

must be taken when soldering as the plastic covering is liable to peel off if heated. This applies wherever plastic sleeving is used in the televisor.

Building the Sound Receiver

Two screens are required but should not be fitted at this stage, but later as the wiring proceeds. All holes should be drilled and rubber grommets fitted where required.

The valveholders are first fitted on the chassis and the filaments can be wired. The earthy side of the filaments are connected by running a wire directly under the fixing bolt of the valveholder(s).

The first coil (L9) can now be wound. The tap is made and the coil is wound in a similar manner to L1 (see Fig. 1). The earthy end of the coil is wound round the bolt fastening the coil to the chassis. All the coils are wound on ⅜in. formers. The method of winding the coils is shown in Fig. 5. Spacing between turns is approximately 2 mm. The primaries of L10 and L11 are covered with insulated sleeving and are wound on top of the secondaries. After L9 is fitted in its place the top end of the coil is connected to grid of V7. The trimmer is bolted to the chassis using a strip of insulating material between it and the chassis and it is wired in. The cathode resistor R19 and its associated condenser C27 are wired directly across the valveholder. Pin 9 is earthed in the manner given previously and the other earthed pins are wired as shown in the diagram.

The screen can now be erected and wiring can proceed on the next section.

Firstly the coil secondary is wound, the earthy end of the winding being slipped under the bolt holding the coil former and the grid end being left free. The primary (insulated wire) is now wound on by wiring it first to anode of V7 and taking the wire round the coil (2 turns) in the direction indicated in Fig. 5 and soldering the top end to grid 2 V7. The free end of the secondary can now be wired to grid of V8. Trimmer T2 should be fitted in a similar manner to T1 and wired in. The tag strip (2 point) is bolted on the chassis and the wiring can proceed as indicated in the diagram.

VR2 should be fitted after the rest of the wiring has been completed, and the screen can then be erected.

The coil L11 should be dealt with in a similar manner to L10, but in this case the " free " end of the secondary goes to anode of V9. Wiring can proceed as shown in the diagram. Two wires are taken through the chassis for connection to VR3, the volume control, though the control is not fitted at this stage.

The final job is to fit the loudspeaker transformer and to take two wires through the chassis for connection to the speech coil when the loudspeaker is fitted.

Two wires are now taken from the L.T.— and H.T.— respectively and taken out through the chassis.

At this stage the sound receiver and vision receiver can be bolted together to form a complete unit. The interconnecting coaxial cable from L2 to L9 can completed and the front panel holding the loudspeaker and contrast and volume controls can be fitted, and those items wired up.

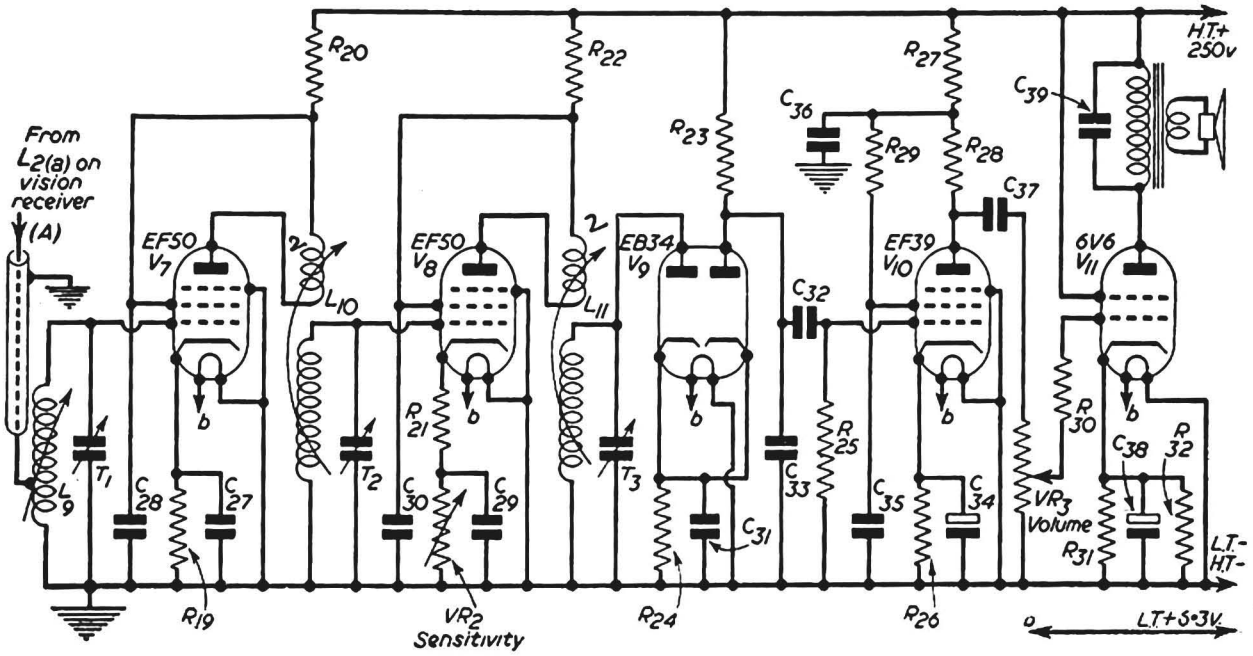

Fig. 4.—Circuit of the sound unit.

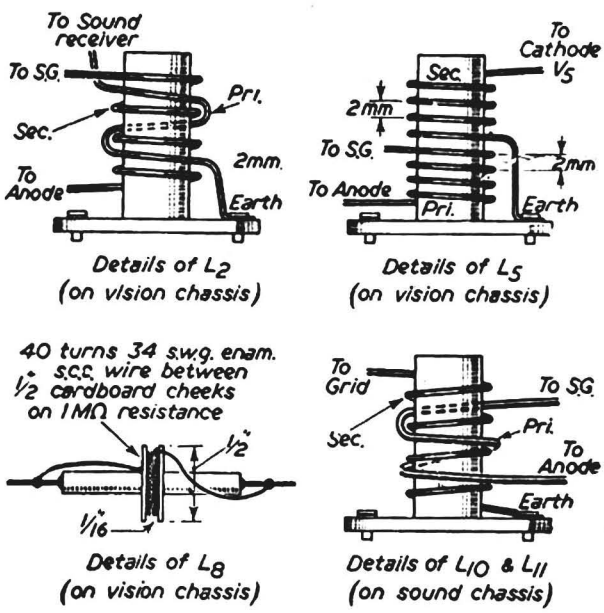

Fig. 5.—Coil winding data.

PRESENTED WITH "PRACTICAL TELEVISION" ISSUE DATED MARCH 1952

THE P.T. "ARGUS"

21-VALVE 5-UNIT TV. RECEIVER

PRICE 2/6d

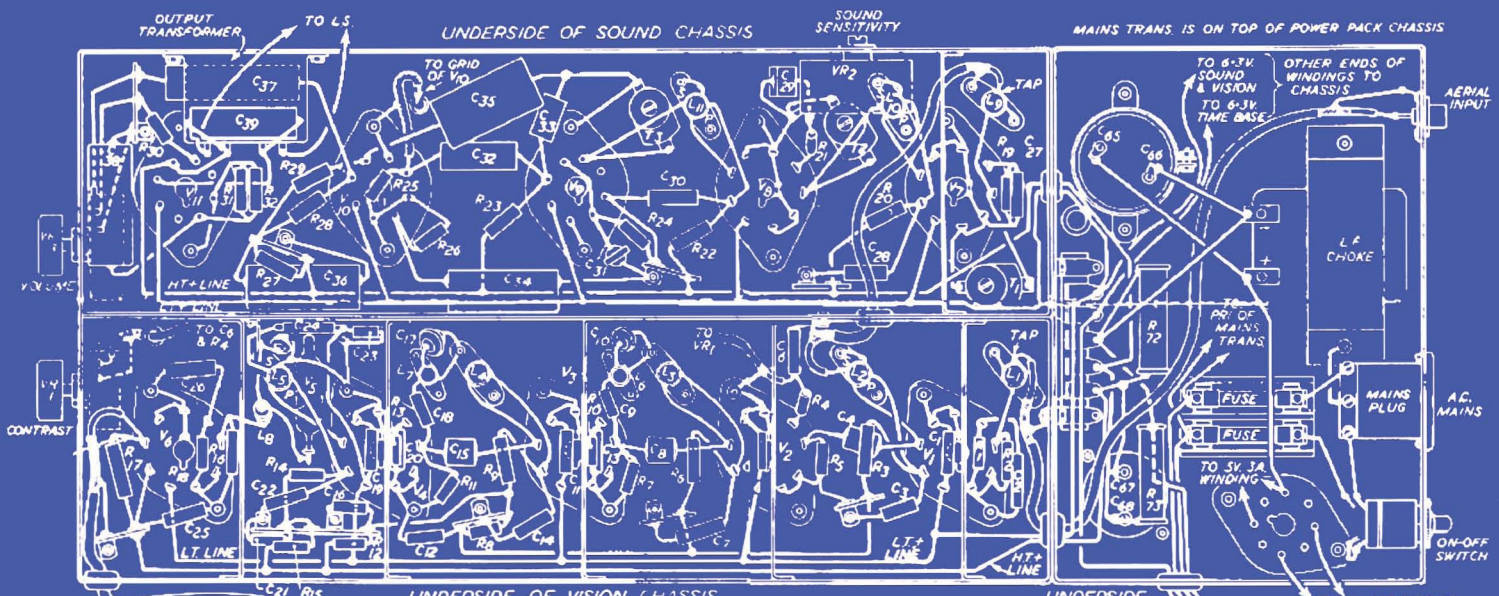

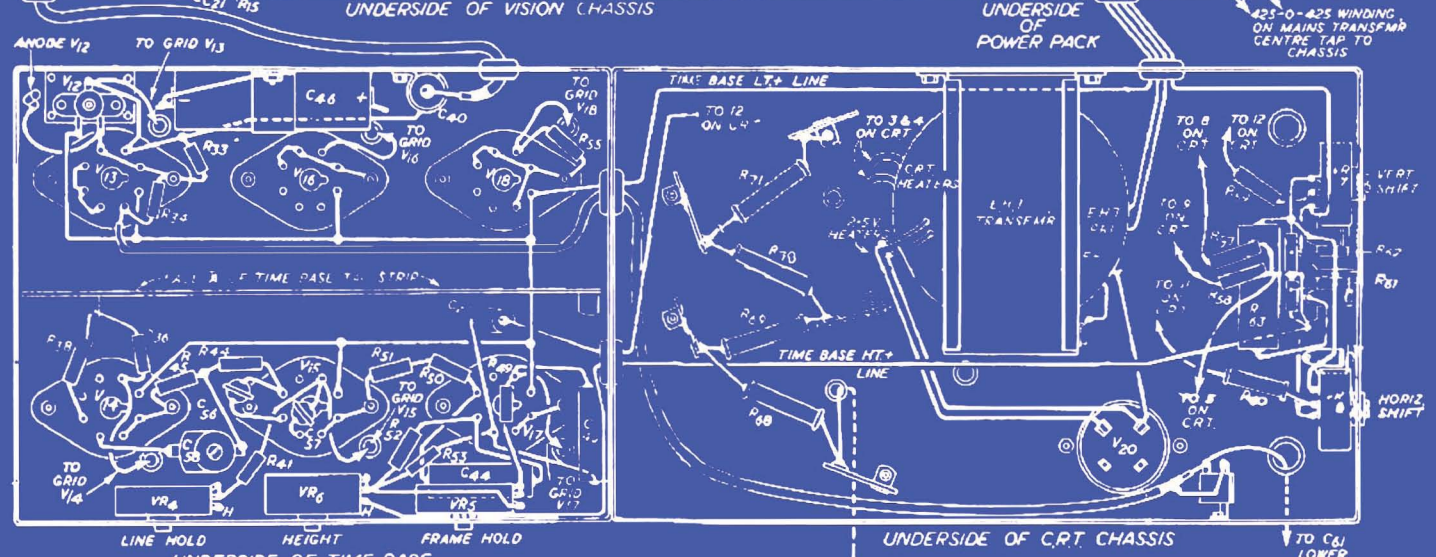

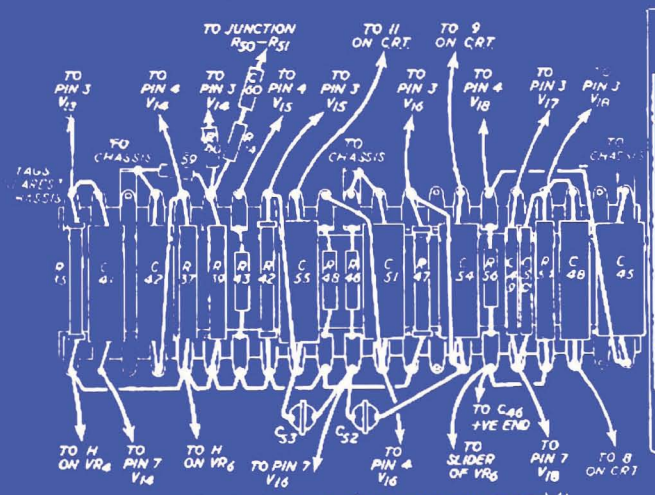

TAG STRIP DETAILS (LOOKING ON FACE 'A')

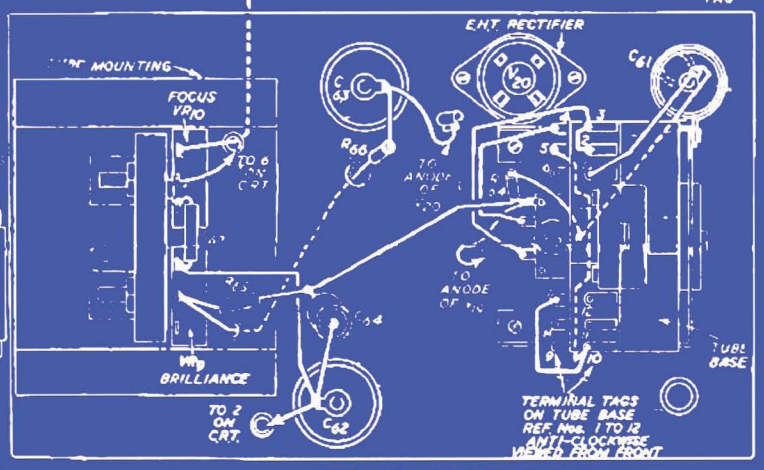

TOP VIEW OF C.R.T. CHASSIS

COIL DATA

22 GAUGE WIRE USED THROUGHOUT EXCEPT FOR L_8 (SEE TEXT). ALL DIMENSIONS ARE OF INSULATED WIRE

COIL No.	L_1 & L_3	L_1 TAP	L_{2a}	L_2 & L_4	L_5 PRI-SEC.	L_6 & L_7	L_6 & L_7 TAP	L_{10} & L_{11} PRI.	L_{10} & L_{11} SEC.
LONDON	7T.	2T.	2T.	6T.	6½T. 6T.	NIL	1½ 2T.	2T.	5½T.
SUTTON COLDFIELD	5	1½	1½	4	4½ 4	9T.	3½ 1½	2	3½
HOLME MOSS	6	2	1½	5	5½ 5	11	3½ 4½	2	4½
KIRK O SHOTTS	5½	1½	2	4½	5 4½	10	3 4	2	4
WENVOE	4½	1	1	3½	4 3½	8	3½ 1	2	3

VALVE LIST

$V_{1,2,3,4,6,7 \& 8}$	EF50
$V_{5\ 12 \& 19}$	EA50
V_9	EB34
V_{10}	EF39
V_{11}	6V6
$V_{13\ 14\ 15\ 16\ 17 \& 18}$	SP61
V_{20}	2X2
V_{21}	5U4G

Printed by Penton Ltd. London & Watford